Analogue amplifier cable model

Analogue amplifier in aluminium diecast housing

Description

Amplifiers are electronic devices designed in order to adapt strain gauge sensors to indicators or to control systems.

Model LCV is part of the connecting cable of the force transmitter. Practical shape of housing allows easy fastening with simple straps. Housing is designed for harsh environment according to protection type IP 67. The amplifier can be build in the large transmitters directly.

Alternatively to the version described above diecasting housing for the strain gauge amplifier can be delivered.

For mounting in control boxes with standard terminal strips according to DIN EN 50 022 a special amplifier is available. All strain gauge force transducers powered by a DC voltage can be connected. Span and deadload are adjustable at the yard. For checking the evaluation device a control signal can be generated. Trouble signals can be eleminated partly using an input low-pass.

Distribution voltage of 12 up to 30 Volt guarantees a direct connection to a PLC because PLC use 24 Volt distribution voltage normally. Analogue outputs 0..10 Volt or 0(4)..20 mA guarantee direct signal processing.

Features

- 10 VDC or 20 mA standard signal
- Direct connection with PLC
- Compact shape
- Easy handling
- Protection type IP 67
- Robust aluminium diecasting housing, usable in heavy industry
- Mounting on standard terminal strips according to DIN EN 50 022
- Free configurability
- Input filter for mush killing

Applications

- Industrial weighing technology
- Force monitoring and measurement on machines

Specific information

- 100% inspection (BR EZ15) (for force transducers with 100% resistance)

Model: EZE09X001
EZE15X004

Technical data

Dimensions

Model	Cable integrated		Aluminium diecasting housing	
Symbol			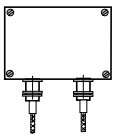	
Order No.	**EZE09X001[1)]**		**EZE15X004001**	**EZE15X004002**
Output - Signal - Accuracy - Burden	 0...10 VDC 3 wire technology 0.03% Output voltage > 2 kΩ	 4...20 mA 3 wire technology Output current < 500Ω	 0...10 VDC 3 wire technics 0.02% Output voltage: > 2 kΩ	 4...20 mA 3 wire technics Output current < 500Ω
Input - Signal - Input resistance - Sensor supply - Limit frequency	 2.5 … 15 mV* (* 2.5 mV=minimal,still fully amplifiable input signal) 10^9 Ω 5 V DC, max. 50 mA 1 kHz (3 dB)		 2.5 … 15 mV* (* 2.5 mV=minimal,still fully amplifiable input signal) 10^9 Ω 5 V DC, max. 50 mA 1 kHz (3 dB) Input filter adjustable 10 Hz … 1 kHz	
Setting - zero point - amplification	 setting hard-coded in factory		 ±10% continuously adjustable rough and fine adjustment possible through DIP-switches and potentiometers	
Power requirement	12 … 28 V DC, waviness ≤ 10%; Output voltage < 40 mA	 Output current < 60 mA	16 … 32 V DC, waviness ≤ 10%; Output voltage < 40 mA	 Output current < 60 mA
Nominal temperature range	+10 .... + 40 °C		+10 .... + 40 °C	
Service temperature range	0 .... + 60 °C		0 .... + 60 °C	
Storage temperature range	-10 .... + 70 °C		-10 .... + 70 °C	
Temperature effect - zero point - measuring span	 0.15% / 10 K 0.05% / 10 K	 0.2% / 10 K 0.1% / 10 K	 0.15% / 10 K 0.05% / 10 K	 0.2% / 10 K 0.1% / 10 K
Noise emission	acc. to EN 61326		acc. to EN 61326	
Noise immunity	acc. to EN 61326		acc. to EN 61326	
Protection type (acc. to EN 60529/IEC 529)	IP 67		IP 67	
Test	- - -		100 % (for transducers with 100% resistance)	
Electrical connection cable sensor – amplifier cable amplifier – display	2 x PG7 – cable gland 1 m (max 2.5 m) 2 m (max 10 m)	 1 m (max 2.5 m) 2 m (max 100 m)	2 x PG7 – threaded joint 1 m (max 2.5 m) 2 m (max 10 m)	 1 m (max 2.5 m) 2 m (max 100 m)
Housing - Material - Dimensions	 Aluminium ∅ 25 mm x 115 mm		 Aluminium 98 x 64 x 36 mm (B x H x T)	

Options

Model	Cable integrated		Aluminium diecasting housing	
No.	**EZE09X001[1)]**		**EZE15X004**	**EZE15X004**
Output	±10 VDC 0...5 VDC ±5 VDC 3 wire technics	0...20 mA 3 wire technics	±10 VDC 0...5 VDC ±5 VDC 3 wire technics	0...20 mA 3 wire technics
Auxilary supply	- - -		8...16 VDC at ± 5 V ≤ 5 mA	
Electr. Connection	Circ. connector M12x1, 4-pin		connector 6-pin DIN 45322	
Check external	- - -		16....28 VDC	

[1)] can only be ordered and supplied together with a force transducer

Operating and display element

Aluminium diecasting housing

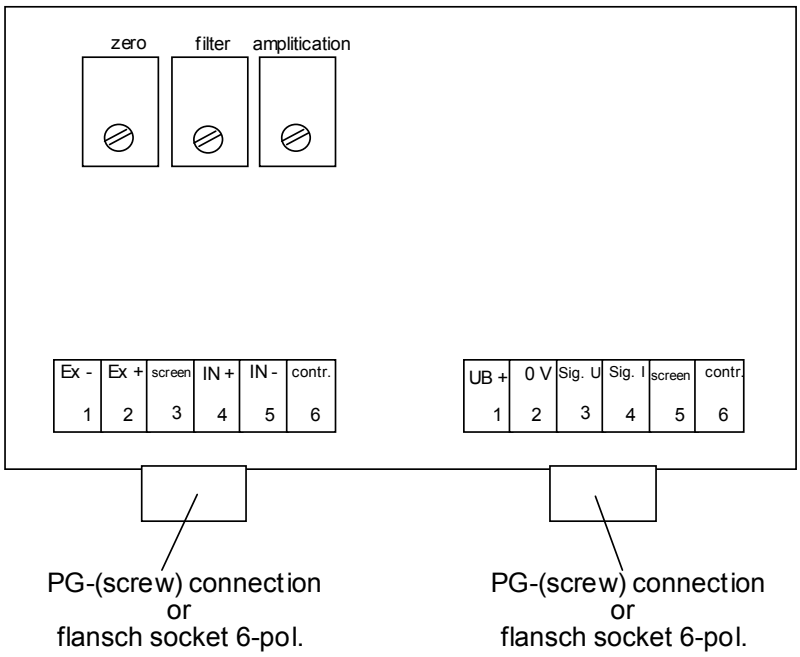

Pin configuration

Aluminium diecasting housing

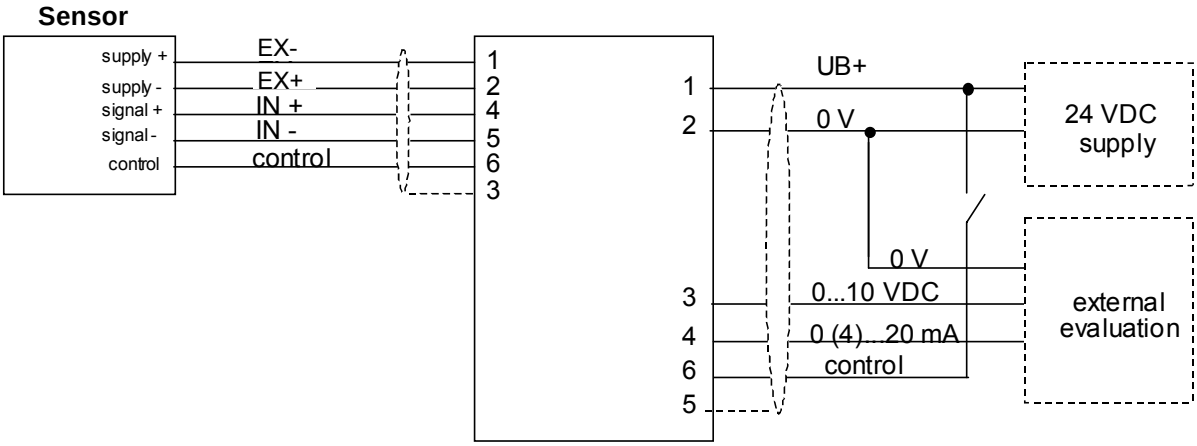

Pin configuration

Cable integrated

amplifier output , open wires

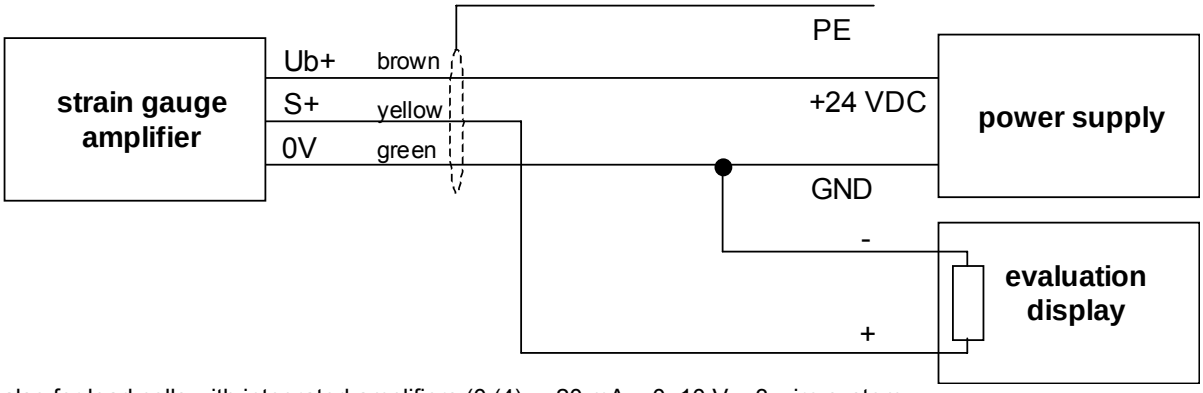

also for load cells with integrated amplifiers (0 (4) ... 20 mA, 0..10 V, 3-wire system

circular connector M12x1, 4-pin (optional)

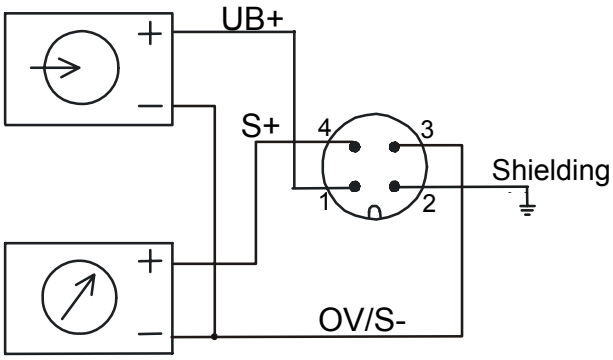

Order information

1. model
2. measuring range
3. output signal
4. options

Modifications reserved